3' x 5' PANEL

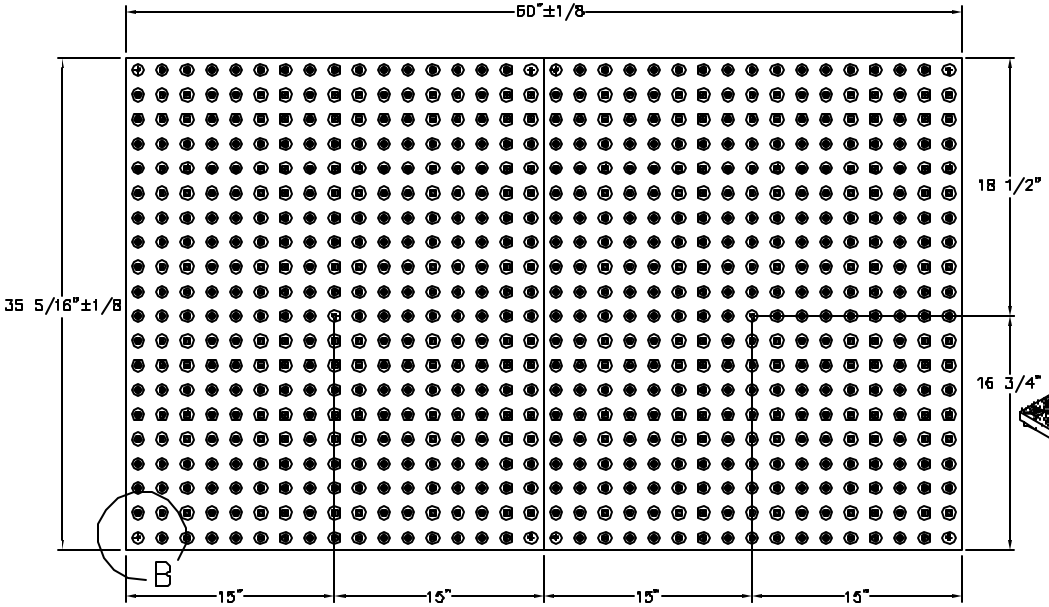

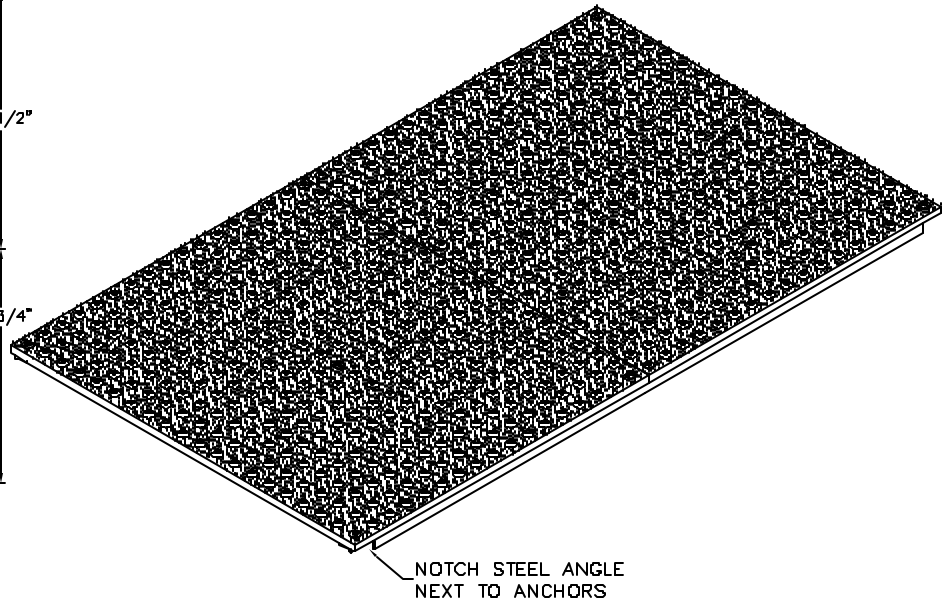

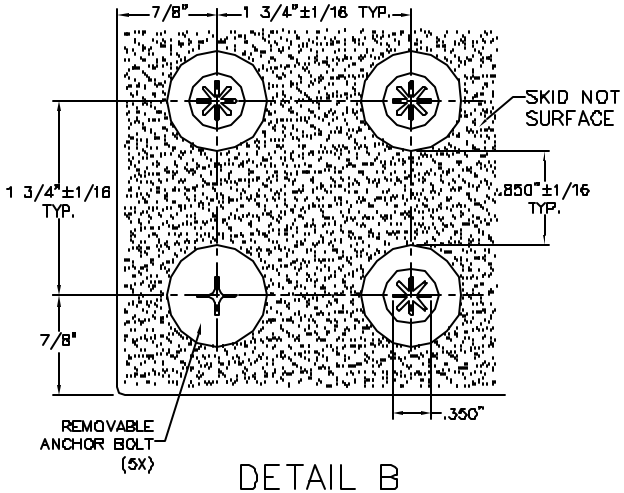

DETAIL B

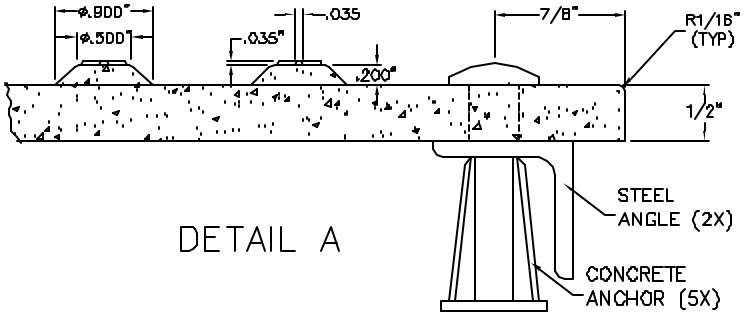

DETAIL A

"XXX" DESIGNATE COLOR

FILENAME A6-3660RADA-SOLID

13230 Saticoy Street, North Hollywood, CA 91605 (818) 982-3400

ARMORCAST PRODUCTS COMPANY

"THE INFORMATION IN THIS DRAWING IS CONFIDENTIAL. THE DRAWING IS NOT TO BE REPRODUCED OR ITS CONTENTS DIVULGED IN ANY WAY WHATSOEVER EXCEPT WITH THE PRIOR WRITTEN APPROVAL OF ARMORCAST PRODUCTS COMPANY. IT IS THE PROPERTY OF AND MUST BE RETURNED TO ARMORCAST PRODUCTS COMPANY, 13230 SATICOY STREET, NORTH HOLLYWOOD, CALIFORNIA 91605."

PART DESCRIPTION: 36" X 60" X 1/2" REPLACEABLE DETECTABLE WARNING PANEL			
CUSTOMER			MAX. LOAD
DRAWN: OA	DATE: 9/06	SCALE: NONE	DRAWING NUMBER: A6003660RADAXXX
APPROV.: WS	9/06	MATERIAL: POLYMER CONCRETE	